ST-1804, ST-1904

120Vac/240Vac, 4 Points, AC, Terminal

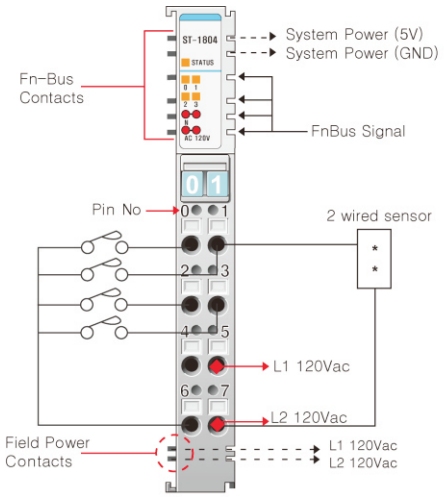

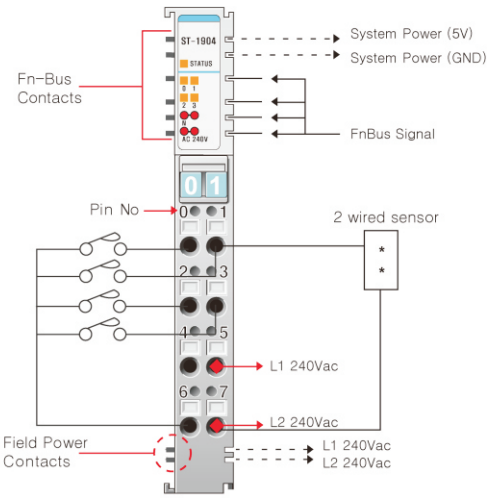

Item	ST-1804	ST-1904
Input Specification		
Inputs Per Module	4 Points	
Indicators	4 Green Input States, 1 Green/Red Fn-Bus State	
ON-state Voltage	120Vac nominal Min.85Vac ~ Max. 132Vdc	240Vac nominal Min.170Vac ~ Max. 264Vdc
Min. OFF-state Voltage	Max. 60Vac	Max. 130Vac
ON-state Current	Max. 8mA / Point @132Vdc	Max. 12mA / Point @264Vdc
Input Signal Delay	OFF to ON : Max. 10ms / ON to OFF : Max. 10ms	
Nominal Input Impedance	Typ. 11KΩ	Typ.22KΩ
Frequency Range	47-63Hz	
Common Type	4 Points / 2COM (Single Common)	
General Specification		
Power Dissipation	Max. 35mA @5.0Vdc	Max. 35mA @5.0Vdc
Isolation	I/O to Logic : Photocoupler Isolation	
Field Power	Supply Voltage : 120Vac nominal Voltage Range : Min. 85vac ~ Max. 132Vac	Supply Voltage : 240Vac nominal Voltage Range : Min. 170 ~ Max. 264Vdc
Wiring	I/O Cable Max. 2.0㎟(AWG 14)	
Weight	70g	
Module Size	12mm x 99mm x 70mm	
Environment Condition	Refer to " Environment Specification"(page : 1-191)	
Pin No.	Description	Description
0	Input Channel 0	Input Channel 0
1	Input Channel 1	Input Channel 1
2	Input Channel 2	Input Channel 2
3	Input Channel 3	Input Channel 3
4	L1	L1
5	L1	L1
6	L2	L2
7	L2	L2
-	-	-
-	-	-
-	-	-
-	-	-
-	-	-
-	-	-
-	-	-
-	-	-
-	-	-
-	-	-
-	-	-
-	-	-
-	-	-
-	-	-