ST-3444

0~10Vdc, 4 Channels, Voltage, 14bit

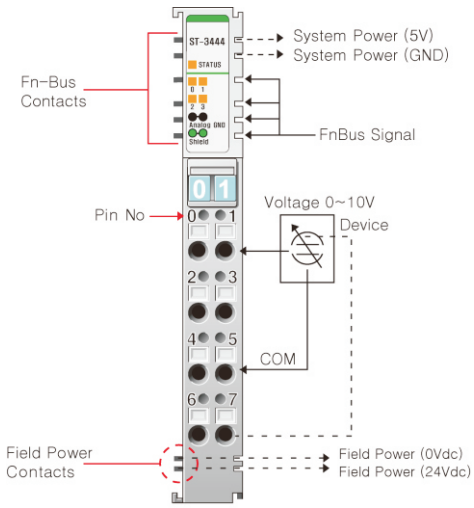

Item	ST-3444
Input Specification	
Number of Inputs	4 Channels Single Ended, Non-isolated Between Channels
Indicators	4 Green/Red States, 1 Green/Red Fn-Bus State
Resolution in Ranges	14Bits : 0.6mV/Bit
Input current Range	0~10Vdc
Data Format	16bits Integer (2's compliment)
Module Error	±0.1% Full Scale @25℃ ±0.3% Full Scale @0℃, 60℃
Input Impedance	500KΩ
Conversion Time	4msec/All channel
Calibration	Not Required
Diagnostic	No
Common Type	4 Channels / 2COM (Single Common)
General Specification	
Power Supply	From System Power DC/DC
Power Dissipation	Max. 170mA@5.0Vdc
Isolation	I/O to Logic : Photocoupler Isolation Field Power : Not Connected
Wiring	I/O Cable Max. 2.0㎟
Weight	70g
Module Size	12mm x 99mm x 70mm
Environment Condition	Refer to " Environment Specification"(page : 1-191)
Pin No.	Description
0	Input Channel 0
1	Input Channel 1
2	Input Channel 2
3	Input channel 3
4	Input Channel Common (0V)
5	Input Channel Common (0V)
6	Chassis Ground / Shield
7	Chassis Ground / Shield
-	-
-	-
-	-
-	-
-	-
-	-
-	-
-	-
-	-
-	-
-	-
-	-