ST-3524, ST-3544

-10Vdc~10Vdc, 4 Channels, Voltage, 12bit (ST-3524)
-10Vdc~10Vdc, 4 Channels, Voltage, 14bit (ST-3544)

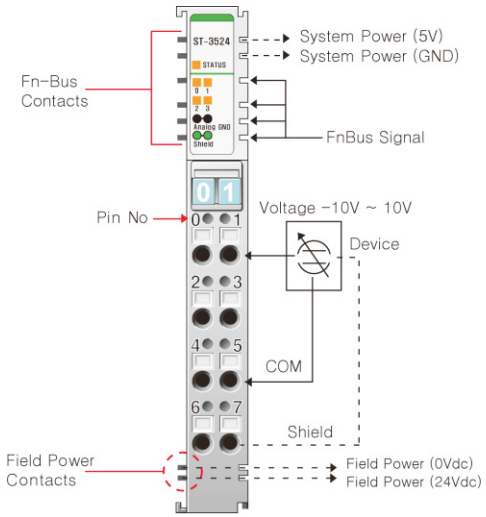

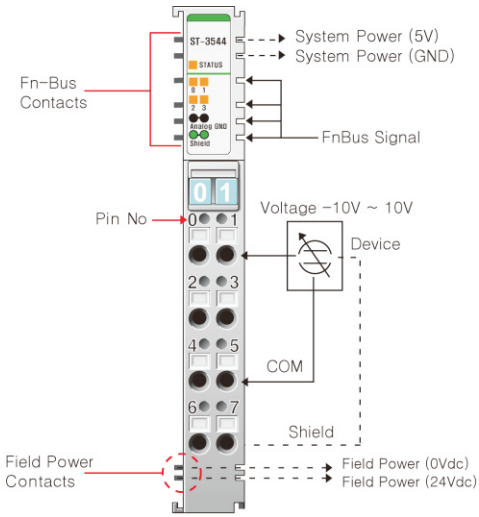

Item	ST-3524	ST-3544
Input Specification		
Number of Inputs	4 Channels Single Ended, Non-isolated Between Channels	
Indicators	4 Green/Red States, 1 Green/Red Fn-Bus State	
Resolution in Ranges	12Bits : 4.8mV/Bit	14Bits : 1.2mV/Bit
Input Voltage Range	-10~10Vdc	
Data Format	16bits Integer (2's compliment)	
Module Error	±0.1% Full Scale @25℃ ±0.3% Full Scale @0℃, 60℃	
Input Impedance	500KΩ	
Conversion Time	4msec/All channel	
Calibration	Not Required	
Diagnostic	No	
Common Type	4 Channels / 2COM (Single Common)	
General Specification		
Power Supply	From System Power DC/DC	
Power Dissipation	Max. 170mA@5.0Vdc	Max. 200mA@5.0Vdc
Isolation	I/O to Logic : Photocoupler Isolation Field power : Not Connected	
Wiring	I/O Cable Max. 2.0㎟	
Weight	70g	
Module Size	12mm x 99mm x 70mm	
Environment Condition	Refer to " Environment Specification"(page : 1-191)	
Pin No.	Description	Description
0	Input Channel 0	Input Channel 0
1	Input Channel 1	Input Channel 1
2	Input Channel 2	Input Channel 2
3	Input channel 3	Input Channel 3
4	Input Channel Common (0V)	Input Channel Common (0V)
5	Input Channel Common (0V)	Input Channel Common (0V)
6	Chassis Ground / Shield	Chassis Ground / Shield
7	Chassis Ground / Shield	Chassis Ground / Shield
-	-	-
-	-	-
-	-	-
-	-	-
-	-	-
-	-	-
-	-	-
-	-	-
-	-	-
-	-	-
-	-	-
-	-	-