ST-4212, ST-4214

4~20mA, 2/4 Channels, Current, 12bit

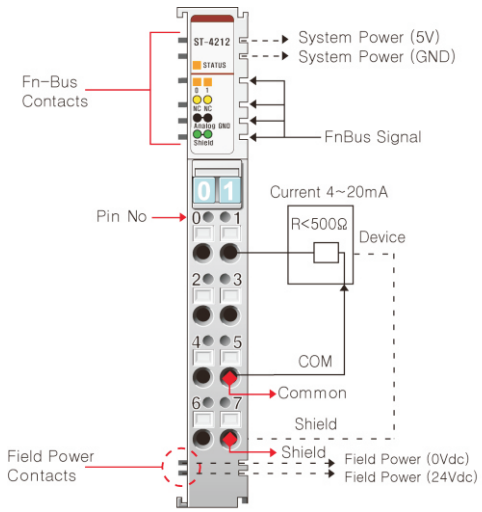

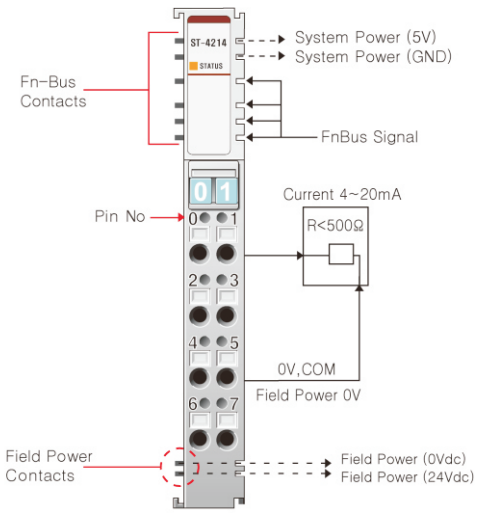

Item	ST-4212	ST-4214
Output Specification		
Output Per Module	2 Channels Single Ended, Non-isolated Between Channels	4 Channels Single Ended
Indicators	2 Green States, 1 Green/Red Fn-Bus State	1 Green/Red Fn-Bus State
Resolution in Ranges	12Bits : 3.9uA/Bit	
Output Current Range	4~20mA	
Data Format	16bits Integer (2' compliment)	
Module Error	±0.1% Full Scale @25℃ ±0.3% Full Scale @0℃, 60℃	
Load Resistance	Max. 500Ω	
Conversion Time	2msec/All channel	4msec/All channel
Calibration	Not Required	
Diagnostic	No	
Common Type	2 Channels / 2COM(Single Channel)	4 Common, Field Power 0V is Common(AGND)
General Specification		
Power Dissipation	Max. 60mA@5.0Vdc	
Isolation	I/O to Logic : Photocoupler Isolation Field power : Non-isolation	
Field Power	Supply Voltage : 24Vdc nominal Voltage Range : 15~28.8Vdc Power Dissipation : Max.60mA@24Vdc	Supply Voltage : 24Vdc nominal Voltage Range : 18~28.8Vdc Power Dissipation : Max.60mA@24Vdc
Wiring	I/O Cable Max. 2.0㎜	
Weight	70g	
Module Size	12mm x 99mm x 70mm	
Environment Condition	Refer to " Environment Specification"(page : 1-191)	
Pin No.	Description	Description
0	Output Channel 0	Output Channel 0
1	Output Channel 1	Output Channel 1
2	No Connection	Output Channel 2
3	No Connection	Output Channel 3
4	Output Channel Common (0V)	Field Ground 0V(AGND), Common
5	Output Channel Common (0V)	Field Ground 0V(AGND), Common
6	Chassis Ground / Shield	Field Ground 0V(AGND), Common
7	Chassis Ground / Shield	Field Ground 0V(AGND), Common
-	-	-
-	-	-
-	-	-
-	-	-
-	-	-
-	-	-
-	-	-
-	-	-
-	-	-
-	-	-