ST-4622

0~5Vdc, 2 Channels, Voltage, 12bit

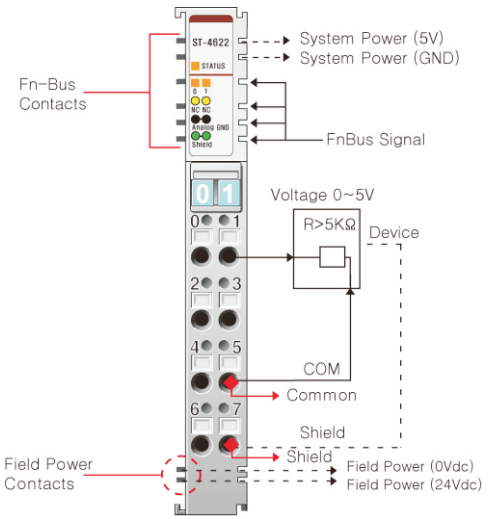

Item	ST-4622
Output Specification	
Output Per Module	2 Channels Single Ended, Non-isolated between channel
Indicators	2 Green States, 1Green/Red Fn-Bus State
Resolution in Ranges	12Bits : 1.22mV/Bit
Output Current Range	0~5Vdc
Data Format	16bits Integer (2' compliment)
Module Error	±0.1% Full Scale @25℃ ±0.3% Full Scale @-20℃, 60℃
Load Resistance	Min. 5KΩ
Conversion Time	2msec/All channel
Calibration	Not Required
Diagnostic	No
Common Type	2 Channels / 2 COM(Single common)
General Specification	
Power Supply	From System Power DC/DC
Power Dissipation	Max. 155mA@5.0Vdc
Isolation	I/O to Logic : Photocoupler Isolation I/O to Field Power : Not Connected
Wiring	I/O Cable Max. 2.0㎟ (AWG#14)
Weight	70g
Module Size	12mm x 99mm x 70mm
Environment Condition	Refer to " Environment Specification"(page : 1-191)
Pin No.	Description
0	Output Channel 0
1	Output Channel 1
2	No Connection
3	No Connection
4	Output Channel Common (0V)
5	Output Channel Common (0V)
6	Chassis Ground / Shield
7	Chassis Ground / Shield
-	-
-	-
-	-
-	-
-	-
-	-
-	-
-	-
-	-
-	-
-	-
-	-